YANMAR

PARTS CATALOG

0CW10-M53200EN

Last update Mar., 2013

PREFACE

1. This parts catalog is the 1st edition of 4TNE84-GB2BT for TOYO DENKI.

Pub.No. : 0CW10-G53200
Published : July, 2009

2. Model name

Engine model	Vehicle	Vehicle made by
4TNE84-GB2BT	GENERATOR	TOYO DENKI

Directions for the Parts Catalog.

1.This Parts Catalog shows both standard and optional parts.
2.Parts may change without prior notice.
3.The following is an example of the Parts Catalog format.

0CF10-G21601 29. FUEL INJECTION PUMP(W/BOOST)

(A)=4JH-DT
(B)=4JH-DTZ
(C)=4JH-DTZP
(D)=4JH-DTZA
(E)=4JH-DTZY
(F)=

① REF.	② LEV.	PARTS NO.	DESCRIPTION	Q'TY (A)	(B)	(C)	(D)	(E)	(F)	③ I	⑤ R
1	1	729595-51390	FUEL INJECTION PUMP	1	1	1	1	1			1
1-1	1	729595-51391	FUEL INJECTION PUMP	1	1	1	1	1		N	1
	(A=E00185)	(B=E00200)									
3	2	26022-060162	SCREW M 6X 16	9	9	9	9	9			
3-1 ④	2	26022-060162	SCREW M 6X 16	4	4	4	4	4		K	
	(A=E00156)	(B=E00156)	(C=E00156) (D=E00156)	(E=E00156)							
4	2	129470-51040	CAMSHAFT	1	1	1	1	1			
5	2	122710-51050	BEARING, ROLLER	2	2	2	2	2			
6	2	129470-51060	RETAINER	1	1	1	1	1			

Remarks
(1) BOOST COMPEMSATOR TYPE. OPTIONAL PART, TO E00155,(4JH-DT, 4JH-DTZ

①Ref. No.

The Ref. No. listed may not be in accordance with the illustration Ref. No.

(Ex.) Illustration No. 1 List Ref No. 1 (Before change) → 1- 1 (After change)

For interchangeable symbols N, R and K, illustrations for new parts may be abbreviated.

②Lev. (Level)

Level indication
The numbers below indicate the level of relativity towards the main part.
1 ----- Main parts (Assembly parts)
2 ----- Sub component included in " 1 ".
3 ----- Sub component included in " 2 ".
Note) Parts that are not for sale are partially illustrated but not listed.

③Interchangeability Symbol

When a part change takes place, one of the following interchangeability symbols is indicated beside the part.

Symbol	Interchangeability	Contents note
N	Old ← Yes / No → New	New Part is interchangeable for Old Part but Old Part is not interchangeable for New Part.
Q	Old ← No / Yes → New	New Part is not interchangeable for Old Part but Old Part is interchangeable for New Part.
R	Old ← Yes / Yes → New	New/ Old Parts are both interchangeable.
S	Old ← No / No → New	New/ Old Parts are both not interchangeable.
W		Part newly added.
Z		Part discontinued.
F		Not interchangeable by a single part but interchangeable together with related parts.
K		Changes only for used parts quantities.

④Effective Machine No.

When a part changes, the effective Machine No. will be indicated in the (A)-(F) column.

Product Symbol	Product No.	Product Symbol	Product No.
C	Clutch No. Compressor No.	F	Machine No. (Agricultural Equip.)
D	Drive No.	M	Machine No.
E	Engine No.		

Note 1) A date may follow the symbol. (Ex.) 1996.01
Note 2) " XXXXX " and " ZZZZZ " are for parts that could not be predicted or for engine models that could not be identified.
Note 3) (A=E00185) is the E (Engine Serial Number) for the column (A) model (in this case 4JH-DT) after the parts design change.

⑤Remarks

Figures or alphabets (symbols) are entered in the remarks column.
The comments (remarks) on parts that are indicated at the bottom of the illustration are the same symbols as those stated above.

Contents

0CW10-M53200

Fig. No.	Fig. Name
4TNE84-GB2BT	
1.	CYLINDER BLOCK
2.	GEAR HOUSING
3.	FLYWHEEL HOUSING & OIL SUMP
4.	CYLINDER HEAD & BONNET
5.	SUCTION MANIFOLD & AIR CLEANER
6.	EXHAUST MANIFOLD
7.	CAMSHAFT & DRIVING GEAR
8.	CRANKSHAFT & PISTON
9.	LUB.OIL SYSTEM
10.	COOLING WATER SYSTEM
11.	FUEL INJECTION PUMP
12.	GOVERNOR
13.	FUEL INJECTION VALVE
14.	FUEL LINE
15.	STARTING MOTOR
16.	GENERATOR
17.	ELECTRICAL PARTS
18.	GASKET SET & TOOLS

Fig. No.	Fig. Name

0CW10-M53200 4TNE84-GB2BT

Fig.1. CYLINDER BLOCK

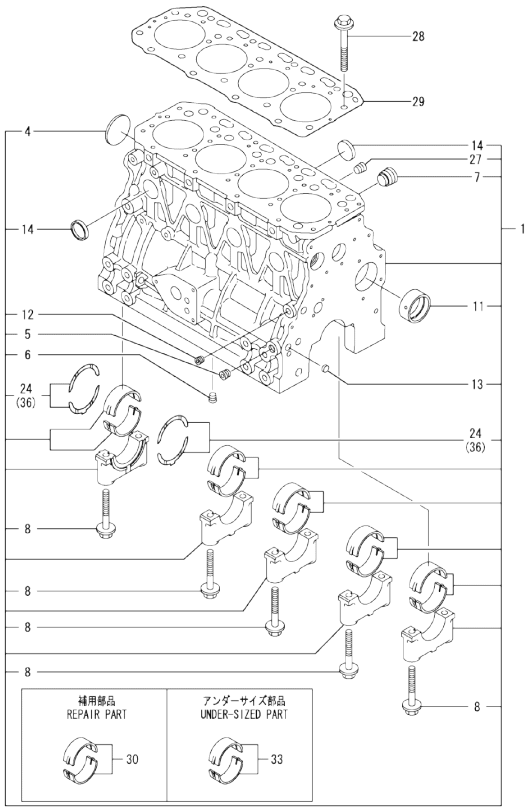

Remarks
(1) REPAIR PART.
(2) UNDER-SIZED(U.S.=0.25)PART.
(3) OVER-SIZED(O.S.=0.25)PART.

0CW10-M53200 Fig.1

(A)=4TNE84-GB2BT
(B)=
(C)=
(D)=
(E)=
(F)=

No.	Lev.	Parts No.	Description	Q'ty (A)	(B)	(C)	(D)	(E)	(F)	I	R
1	1	729408-01561	BLOCK ASSY, CYLINDER	1							
4	2	129001-01250	PLUG, 50	1							
5	2	124160-01910	PLUG, PT1/4	2							
6	2	124160-01910	PLUG, PT1/4	1							
7	2	171051-01921	PLUG, NPTF1	1							
8	2	129150-02020	BOLT, METAL CAP	10							
11	2	129795-02412	BUSH, CAMSHAFT	1							
12	2	23876-010000	PLUG, R01	1							
13	2	27241-120000	PLUG, 12	2							
14	2	27241-300000	PLUG 30	8							
24	2	129150-02931	BEARING, THRUST	2							
27	2	23876-030000	PLUG, R03	1							
28	1	129150-01200	BOLT, HEAD	18							
29	1	129408-01330	GASKET, HEAD	1							
30	1	129001-02931	BEARING, MAIN	5							1
33	1	129150-02871	BEARING, 0.25 US	5							2
36	1	129150-02941	BEARING, THRUST 0.25	2							3

N:Old ←Yes/No→ New, Q:Old ←No/Yes→ New, R:Old ←Yes/Yes→ New, S:Old ←No/No→ New, W:Add, Z:Discontinued, F:Interchangeable by set, K:Q'ty Change

Copyright (C) YANMAR GLOBAL CS CO., LTD. All RightsReserved.

Fig.2. GEAR HOUSING

(A)=4TNE84-GB2BT
(B)=
(C)=
(D)=
(E)=
(F)=

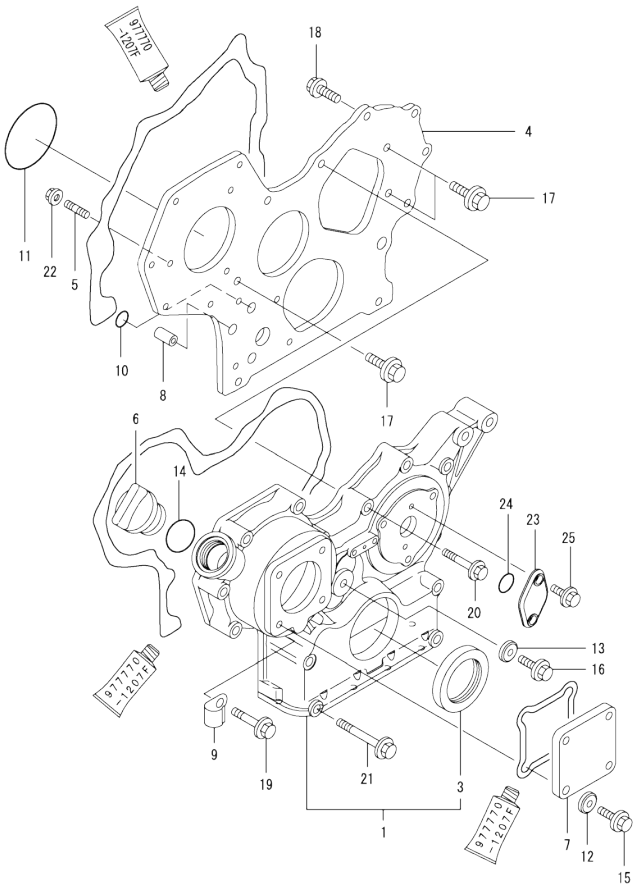

No.	Lev.	Parts No.	Description	Q'ty (A)	(B)	(C)	(D)	(E)	(F)	I	R
1	1	719810-01500	CASE ASSY, GEAR	1							
3	2	129795-01800	SEAL, OIL	1							
4	1	129400-01520	FLANGE, GEAR CASE	1							
5	1	121450-01560	STUD, M8X22	3							
6	1	124160-01751	COVER, FILLER	1							
7	1	124240-01871	COVER	1							
8	1	129795-01950	PIPE, KNOCK L=18	2							
9	1	129150-03100	RETAINER, PIPE	1							
10	1	119609-32040	O-RING, P16	2							
11	1	121850-51960	O-RING	1							
12	1	22190-080002	WASHER, SEAL 6	4							
13	1	22190-080002	WASHER, SEAL 6	1							
14	1	24311-000320	O-RING, 1AP32.0	1							
15	1	26106-080122	BOLT, M8X 12 PLATED	4							
16	1	26106-080162	BOLT, M8X 16 PLATED	1							
17	1	26106-080162	BOLT, M8X 16 PLATED	3							
18	1	26106-080202	BOLT, M8X 20 PLATED	2							
19	1	26106-080452	BOLT, M8X 45 PLATED	6							
20	1	26106-080552	BOLT, M8X 55 PLATED	3							
21	1	26106-080852	BOLT, M8X 85 PLATED	4							
22	1	26306-080002	NUT, M8	3							
23	1	121023-01551	COVER	1							
24	1	24341-000240	O-RING, 1AS24.0	1							
25	1	26106-060162	BOLT, M6X 16 PLATED	2							

N:Old ◄Yes/No► New. Q:Old ◄No/Yes► New. R:Old ◄Yes/Yes► New. S:Old ◄No/No► New. W:Add. Z:Discontinued. F:Interchangeable by set. K:Q'ty Change

Copyright (C) YANMAR GLOBAL CS CO., LTD. All RightsReserved.

Fig.3. FLYWHEEL HOUSING & OIL SUMP

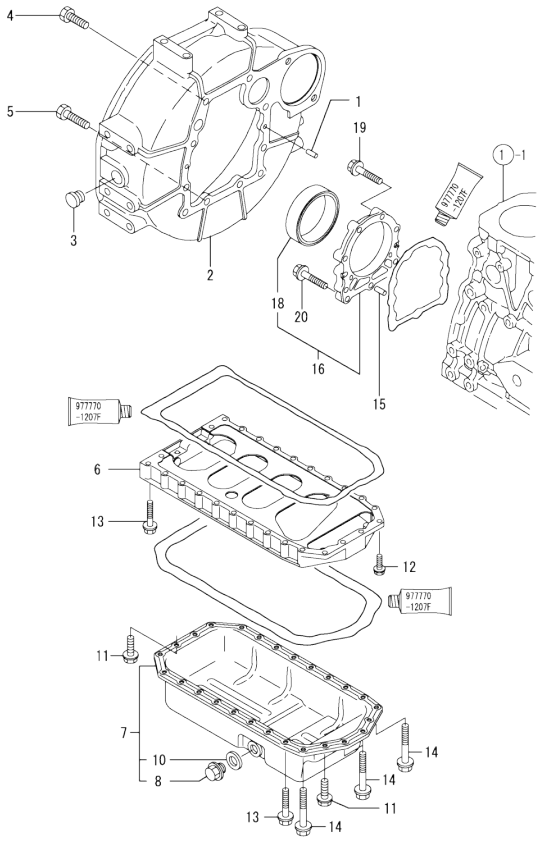

(A)=4TNE84-GB2BT
(B)=
(C)=
(D)=
(E)=
(F)=

No.	Lev.	Parts No.	Description	Q'ty (A)	(B)	(C)	(D)	(E)	(F)	I	R
1	1	129100-01580	PIN, M8X16	2							
2	1	129612-01600	HOUSING, FLYWHEEL	1							
3	1	119620-01750	CAP	1							
4	1	26206-100252	BOLT, M10X 25 PLATED	6							
5	1	26206-100302	BOLT, M10X 30 PLATED	4							
6	1	129400-01730	SPACER, OIL SUMP	1							
7	1	129400-01770	SUMP ASSY, OIL	1							
7-1	1	129688-01780	OIL PAN ASSY, DEEP	1						N	
	(A=E68464)										
8	2	119640-01640	PLUG, DRAIN M22	1							
10	2	22190-220002	WASHER, SEAL 22	1							
11	1	26106-080162	BOLT, M8X 16 PLATED	4							
12	1	26106-080252	BOLT, M8X 25 PLATED	2							
13	1	26106-080452	BOLT, M8X 45 PLATED	20							
14	1	26106-080502	BOLT, M8X 50 PLATED	4							
15	1	129100-01580	PIN, M8X16	2							
16	1	129100-01640	CASE ASSY, OIL SEAL	1							
18	2	129795-01780	SEAL, OIL	1							
19	1	129486-01670	BOLT, M8X30	6							
20	1	26106-080352	BOLT, M8X 35 PLATED	3							

N:Old ←Yes/No→ New. Q:Old ←No/Yes→ New. R:Old ←Yes/Yes→ New. S:Old ←No/No→ New. W:Add. Z:Discontinued. F:Interchangeable by set. K:Q'ty Change

Copyright (C) YANMAR GLOBAL CS CO., LTD. All RightsReserved.

Fig.4. CYLINDER HEAD & BONNET

(A)=4TNE84-GB2BT
(B)=
(C)=
(D)=
(E)=
(F)=

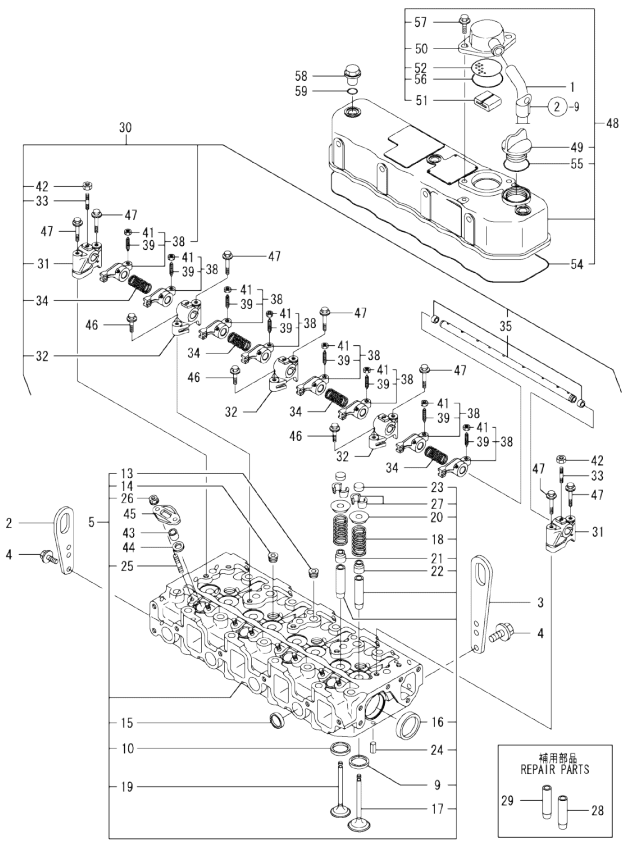

No.	Lev.	Parts No.	Description	Q'ty (A)	(B)	(C)	(D)	(E)	(F)	I	R
1	1	171350-03090	PIPE , BREATHER 900	1							
2	1	119226-07900	LIFTER	1							
3	1	129900-07900	LIFTER	1							
4	1	26106-080142	BOLT, M8X 14 PLATED	4							
5	1	729408-11700	HEAD ASSY, CYLINDER	1							
9	2	129470-11080	SEAT, INTAKE VALVE	4							
10	2	129470-11090	SEAT, EXHAUST VALVE	4							
13	2	23871-020000	PLUG, R02	3							
14	2	23871-030000	PLUG, R03	4							
15	2	27241-220000	PLUG, 22	4							
16	2	27241-400000	PLUG, 40	2							
17	2	129100-11100	VALVE, INTAKE	4							
18	2	129795-11120	SPRING, VALVE	8							
19	2	129100-11130	VALVE, EXHAUST	4							
20	2	129795-11180	RETAINER, SPRING	8							
21	2	121400-11340	SEAL, VALVE STEM	4							
22	2	124460-11340	SEAL, VALVE STEM	4							
23	2	129150-11370	CAP, VALVE	8							
24	2	22351-060012	PIN, SPRING 6.0X12	2							
25	2	26216-060202	STUD, M6X 20	8							
26	2	26366-060002	NUT, M6	8							
27	2	27310-080001	COTTER, 8	8							
28	1	120130-11860	GUIDE, VALVE	4							1
29	1	129150-11810	GUIDE, VALVE	4							1
30	1	129555-11241	SHAFT ASSY, ROCKER	1							
31	2	129155-11260	SUPPORT, ROCKER ARM	2							
32	2	129155-11270	SUPPORT, ROCKER ARM	3							
33	2	119802-11280	STUD	3							
34	2	129150-11280	SPRING	4							
35	2	129550-11290	SHAFT, ROCKER ARM	1							
38	2	729402-11650	ARM ASSY, ROCKER	8							
39	3	129150-11230	SCREW, VALVE ADJUST	8							
41	3	129150-11750	NUT, M8	8							
42	2	26756-080002	NUT, LOCK M8	3							
43	1	119625-11870	PROTECTOR, NOZZLE	4							
44	1	119625-11880	SEAT, NOZZLE	4							
45	1	119625-11900	RETAINER, NOZZLE	4							
46	1	26106-080252	BOLT, M8X 25 PLATED	3							
47	1	26106-080502	BOLT, M8X 50 PLATED	7							
48	1	129400-11350	BONNET ASSY, HEAD	1							
49	2	124160-01751	COVER, FILLER	1							
50	2	129150-03020	COVER, BREATHER	1							
51	2	129150-03070	BAFFLE, BREATHER	1							
52	2	129150-03080	PLATE, BAFFLE	1							
54	2	129550-11310	GASKET, BONNET	1							
55	2	24311-000320	O-RING, 1AP32.0	1							
56	2	24341-000500	O-RING, 1AS50.0	1							
57	2	26106-080162	BOLT, M8X 16 PLATED	2							
58	1	124160-11360	KNOB	3							
59	1	24311-000120	O-RING, 1AP12.0	3							

Remarks
(1) REPAIR PART.

N:Old ←Yes/No→ New. Q:Old ←No/Yes→ New. R:Old ←Yes/Yes→ New. S:Old ←No/No→ New. W:Add. Z:Discontinued. F:Interchangeable by set. K:Q'ty Change

Copyright (C) YANMAR GLOBAL CS CO., LTD. All RightsReserved.

Fig.5. SUCTION MANIFOLD & AIR CLEANER

(A)=4TNE84-GB2BT (D)=
(B)= (E)=
(C)= (F)=

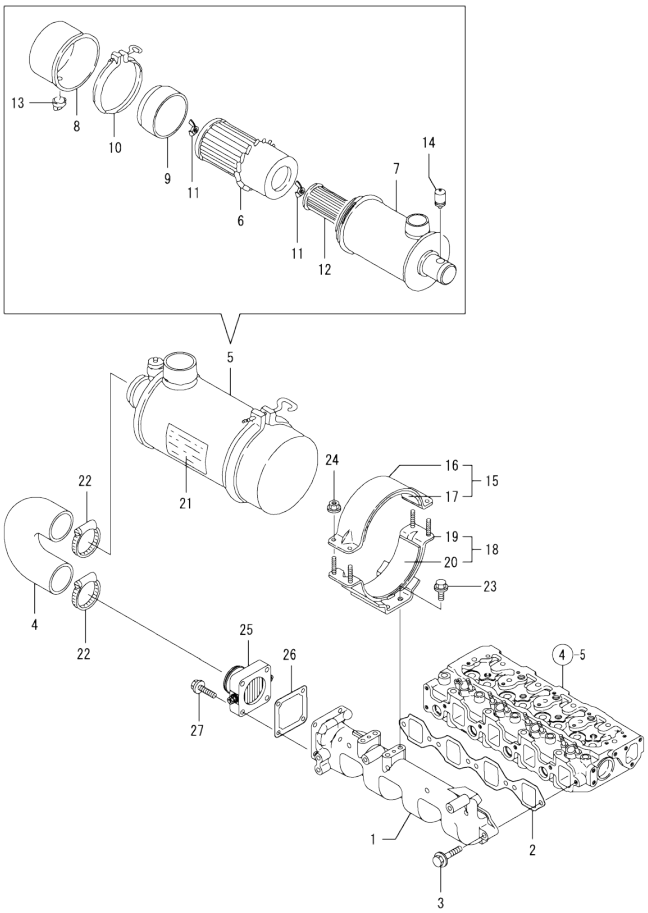

No.	Lev.	Parts No.	Description	Q'ty (A)	(B)	(C)	(D)	(E)	(F)	I	R
1	1	129488-12100	MANIFOLD, AIR INTAKE	1							
2	1	129550-12112	GASKET, MANIFOLD	1							
3	1	26106-080352	BOLT, M8X 35 PLATED	5							
4	1	171351-12210	PIPE, AIR INTAKE	1							
5	1	121521-12500	CLEANER ASSY, AIR	1							
6	2	121420-12511	ELEMENT	1							
7	2	171061-12520	BODY ASSY	1							
8	2	121422-12530	CUP	1							
9	2	121420-12540	SCARF, BAFFLE	1							
10	2	121420-12550	CLAMP ASSY	1							
11	2	121420-12561	NUT, WING	2							
12	2	121422-12570	ELEMENT	1							
13	2	121422-12580	VALVE, UNLOADER	1							
14	2	126650-12680	INDICATOR	1							
15	1	121400-12540	BAND ASSY, CLEANER	1							
16	2	121400-12560	BAND, AIR CLEANER	1							
17	2	121400-12570	SEAT, RUBBER B	1							
18	1	171351-12580	SUPPORT ASSY,CLEANER	1							
19	2	171351-12560	SUPPORT, AIR CLEANER	1							
20	2	171351-12570	SEAT, RUBBER	1							
21	1	171064-12600	LABEL, AIR CLEANER	1							
22	1	23000-060000	CLAMP, 60	2							
23	1	26106-080142	BOLT, M8X 14 PLATED	4							
24	1	26366-060002	NUT, M6	4							
25	1	129120-77502	HEATER	1							
26	1	129150-77511	GASKET	1							
27	1	26106-080352	BOLT, M8X 35 PLATED	4							

N:Old ←Yes/No→ New. Q:Old ←No/Yes→ New. R:Old ←Yes/Yes→ New. S:Old ←No/No→ New. W:Add. Z:Discontinued. F:Interchangeable by set. K:Q'ty Change

Copyright (C) YANMAR GLOBAL CS CO., LTD. All RightsReserved.

Fig.6. EXHAUST MANIFOLD

(A)=4TNE84-GB2BT
(B)=
(C)=
(D)=
(E)=
(F)=

No.	Lev.	Parts No.	Description	Q'ty (A)	(B)	(C)	(D)	(E)	(F)	I	R
1	1	129411-13100	MANIFOLD, EXHAUST	1							
2	1	129550-13110	GASKET	1							
3	1	123900-13610	STUD, M8X80	2							
4	1	123900-13630	BOLT, M8X80	6							
5	1	119131-18320	STUD, M8X22	4							
6	1	26306-080002	NUT, M8	2							
7	1	129930-13201	GASKET, SILENCER	1							

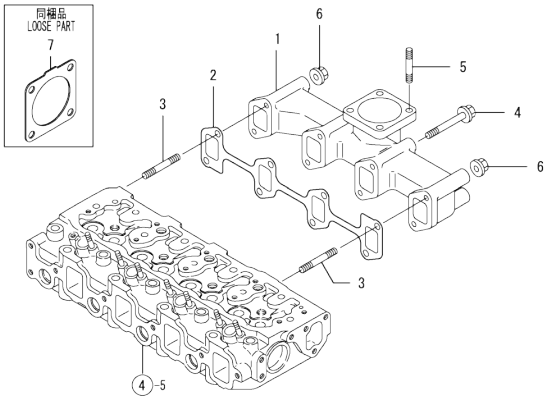

N:Old ←Yes/No→ New. Q:Old ←No/Yes→ New. R:Old ←Yes/Yes→ New. S:Old ←No/No→ New. W:Add. Z:Discontinued. F:Interchangeable by set. K:Q'ty Change

Copyright (C) YANMAR GLOBAL CS CO., LTD. All RightsReserved.

Fig.7. CAMSHAFT & DRIVING GEAR

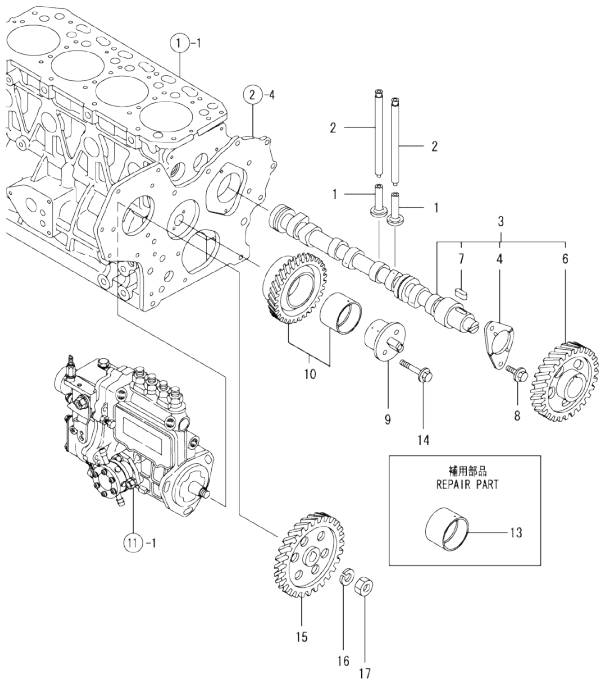

(A)=4TNE84-GB2BT
(B)=
(C)=
(D)=
(E)=
(F)=

No.	Lev.	Parts No.	Description	Q'ty (A)	(B)	(C)	(D)	(E)	(F)	I	R
1	1	129150-14200	TAPPET	8							
2	1	129150-14400	ROD, PUSH L=178	8							
3	1	729402-14580	CAMSHAFT ASSY	1							
4	2	129150-02450	BEARING, THRUST	1							
6	2	129150-14101	GEAR, CAMSHAFT	1							
7	2	22512-070140	KEY, 7X 14	1							
8	1	26106-080142	BOLT, M8X 14 PLATED	2							
9	1	129100-25061	SHAFT, IDLE	1							
10	1	129150-25101	GEAR ASSY, IDLE	1							
13	1	129150-25920	BUSH, IDLE GEAR	1							1
14	1	26106-080452	BOLT, M8X 45 PLATED	2							
15	1	129100-25900	GEAR, PUMP	1							
16	1	22217-120000	WASHER, SPRING 12	1							
17	1	26716-120002	NUT, M12	1							

Remarks
(1) REPAIR PART.

N:Old ←Yes/No→ New. Q:Old ←No/Yes→ New. R:Old ←Yes/Yes→ New. S:Old ←No/No→ New. W:Add. Z:Discontinued. F:Interchangeable by set. K:Q'ty Change

Copyright (C) YANMAR GLOBAL CS CO., LTD. All RightsReserved.

Fig.8. CRANKSHAFT & PISTON

(A)=4TNE84-GB2BT
(B)=
(C)=
(D)=
(E)=
(F)=

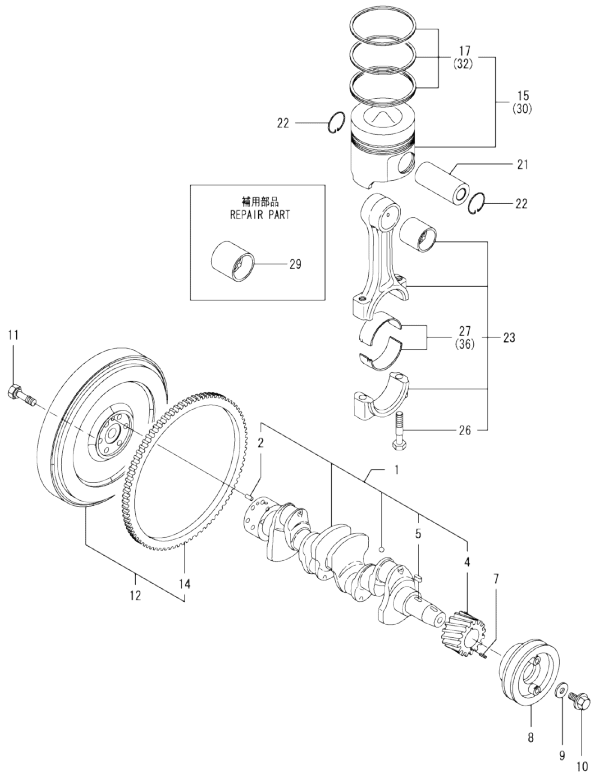

No.	Lev.	Parts No.	Description	Q'ty (A)	(B)	(C)	(D)	(E)	(F)	I	R
1	1	129407-21100	CRANKSHAFT ASSY	1							
2	2	129100-01580	PIN, M8X16	1							
4	2	129150-21200	GEAR, CRANKSHAFT	1							
5	2	22512-070140	KEY, 7X 14	1							
7	1	22351-040010	PIN, SPRING 4.0X10	1							
8	1	171301-21650	V-PULLEY	1							
9	1	129795-21661	WASHER	1							
10	1	121850-21680	BOLT	1							
11	1	121111-21501	BOLT, FLYWHEEL	6							
12	1	171420-21580	FLYWHEEL ASSY	1							
14	2	119865-21600	GEAR, RING	1							
15	1	129002-22090	PISTON ASSY	4							
17	2	129002-22510	RING SET, PISTON	4							
21	1	129202-22300	PIN, PISTON D26 L70	4							
22	1	22252-000260	RING, 26	8							
23	1	729402-23100	ROD ASSY, CONNECTING	4							
26	2	121550-23200	BOLT, CONNECTING ROD	8							
27	2	129150-23601	BEARING, CRANK PIN	4							
29	1	129100-23910	BEARING, PISTON PIN	4							1
30	1	129002-22910	PISTON ASSY, 0.25 OS	4							2
32	2	129002-22960	RING SET, 0.25 OS	4							2
36	1	129150-23611	BEARING, 0.25 US	4							3

Remarks
(1) REPAIR PART.
(2) OVER-SIZE(O.S=0.25)PART.
(3) UNDER-SIZE(U.S=0.25)PART.

N:Old ←Yes/No→ New. Q:Old ←No/Yes→ New. R:Old ←Yes/Yes→ New. S:Old ←No/No→ New. W:Add. Z:Discontinued. F:Interchangeable by set. K:Q'ty Change

Copyright (C) YANMAR GLOBAL CS CO., LTD. All RightsReserved.

Fig.9. LUB.OIL SYSTEM

(A)=4TNE84-GB2BT
(B)=
(C)=
(D)=
(E)=
(F)=

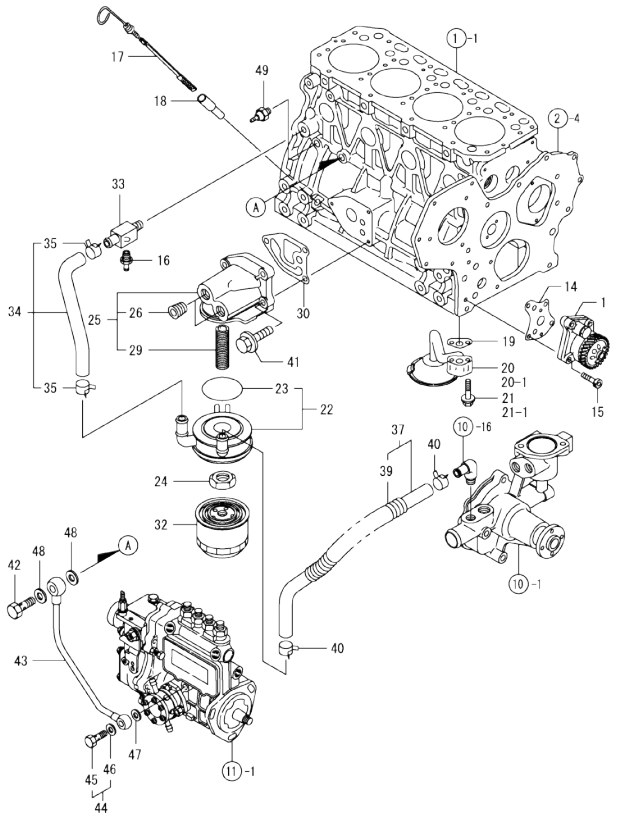

No.	Lev.	Parts No.	Description	Q'ty (A)	(B)	(C)	(D)	(E)	(F)	I	R
1	1	129407-32000	PUMP ASSY, OIL	1							
14	1	129150-32020	GASKET, PUMP	1							
15	1	26450-060252	BOLT, M6X 25	4							
16	1	121550-49111	JOINT, PT1/4	1							
17	1	129403-34800	DIPSTICK, OIL	1							
18	1	121520-34810	GUIDE, DIPSTICK	1							
19	1	129150-35042	GASKET	1							
20	1	129436-35091	PIPE ASSY, OIL INLET	1							
20-1	1	129436-35070	PIPE ASSY	1						S	
	(A=EZZZZZ)										
21	1	26106-080352	BOLT, M8X 35 PLATED	2							
21-1	1	26106-080552	BOLT, M8X 55 PLATED	2						S	
	(A=EZZZZZ)										
22	1	129067-33011	COOLER ASSY, OIL	1							
23	2	129508-33050	O-RING	1							
24	1	129417-33110	NUT	1							
25	1	129033-35100	BRACKET ASSY	1							
26	2	129033-01770	PLUG, NPT1/2	2							
29	2	129417-35150	STUD, L=67	1							
30	1	129103-35122	GASKET	1							
32	1	129150-35153	FILTER	1							1
33	1	129006-44480	JOINT	1							
34	1	129033-49030	PIPE ASSY, WATER	1							
35	2	171008-03990	CLIP, HOSE 18.5	2							
37	1	129467-49040	PIPE, WATER	1							
39	2	129165-49060	TUBE, CORRUGATED	1							
40	1	23080-018000	CLAMP, 18	2							
41	1	26106-080252	BOLT, M8X 25 PLATED	3							
42	1	124160-39140	BOLT, PIPE JOINT M10	1							
43	1	129550-39450	PIPE ASSY, OIL	1							
44	1	124550-59830	BOLT ASSY, JOINT M8	1							
45	2	124550-59820	BOLT, PIPE JOINT M8	1							
46	2	22190-080002	WASHER, SEAL 6	1							
47	1	22190-080002	WASHER, SEAL 6	1							
48	1	22190-100002	WASHER, SEAL 10	2							
49	1	114250-39450	SWITCH, 0.5KG	1							

Remarks
(1) REPAIR PART.

N:Old $\frac{\text{Yes}}{\text{No}}$ New. Q:Old $\frac{\text{No}}{\text{Yes}}$ New. R:Old $\frac{\text{Yes}}{\text{Yes}}$ New. S:Old $\frac{\text{No}}{\text{No}}$ New. W:Add. Z:Discontinued. F:Interchangeable by set. K:Q'ty Change

Copyright (C) YANMAR GLOBAL CS CO., LTD. All RightsReserved.

Fig.10. COOLING WATER SYSTEM

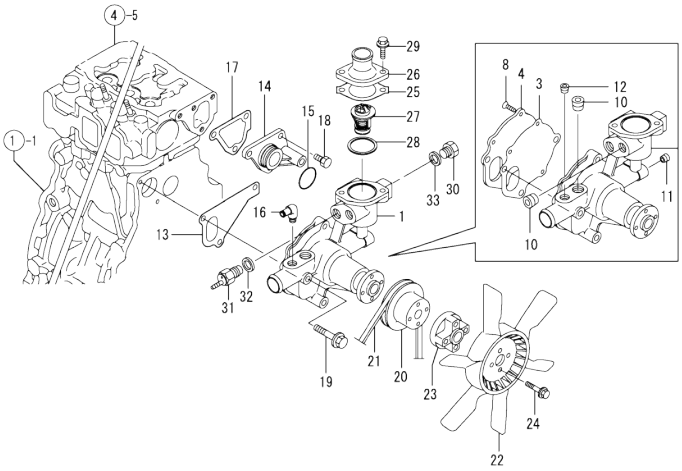

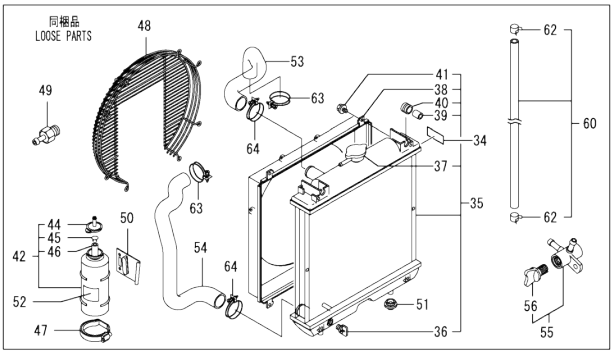

(A)=4TNE84-GB2BT
(B)=
(C)=
(D)=
(E)=
(F)=

No.	Lev.	Parts No.	Description	Q'ty (A)	(B)	(C)	(D)	(E)	(F)	I	R
1	1	129001-42004	PUMP ASSY, WATER	1							
3	2	129100-42051	GASKET, WATER PUMP	1							
4	2	129100-42121	PLATE	1							
8	2	121850-42410	SCREW	3							
10	2	129916-49740	PLUG, R03	2							
11	2	23876-010000	PLUG, R01	1							
12	2	23876-020000	PLUG, R02	1							
13	1	129486-42021	GASKET, WATER PUMP	1							
14	1	129001-42040	JOINT	1							
15	1	129486-42140	O-RING, G30	1							
16	1	129103-49301	ELBOW, PT1/4	1							
17	1	124395-49840	GASKET	1							
18	1	26106-080162	BOLT, M8X 16 PLATED	3							
19	1	26106-080602	BOLT, M8X 60 PLATED	3							
20	1	129403-42380	V-PULLEY, D=110	1							
21	1	129612-42350	V-BELT, A38	1							
22	1	129403-44740	FAN, COOLING 370	1							
23	1	171353-44760	SPACER, FAN	1							
24	1	26106-060352	BOLT, M6X 35 PLATED	4							
25	1	129795-49551	GASKET	1							
26	1	129350-49560	COVER, THERMOSTAT	1							
27	1	129155-49801	THERMOSTAT, 71	1							
28	1	129150-49811	GASKET, THERMOSTAT	1							
29	1	26106-080202	BOLT, M8X 20 PLATED	2							
30	1	121450-42450	PLUG, M16	1							
31	1	121250-44901	SWITCH, 110	1							
32	1	124465-44950	GASKET, 16	1							
33	1	124465-44950	GASKET, 16	1							
34	1	172437-03391	LABEL, RADIATOR	1							
35	1	129508-44501	RADIATOR ASSY	1							
36	2	129508-44550	COCK ASSY	1							
37	2	129107-44590	CAP, RADIATOR	1							
38	2	129601-44600	SHROUD	1							
39	2	118400-44670	COLLAR	2							
40	2	118400-44720	MOUNT, RUBBER	2							
41	2	26014-060122	BOLT, M6X 12	4							
42	1	124450-44510	TANK ASSY, SUB	1							
44	2	124450-44530	CAP	1							
45	2	124450-44560	RETAINER	1							
46	2	23061-070230	PIPE, 7X 230	1							
47	1	124450-44550	BAND	1							
48	1	129601-44560	GUARD	1							
49	1	119156-44600	COCK ASSY	1							
50	1	121256-44600	BRACKET, SUB TANK	1							
51	1	119255-44660	ABSORBER	2							
52	1	124764-44810	LABEL, SUB TANK	1							
53	1	129612-49030	PIPE, WATER	1							
54	1	129612-49040	PIPE, WATER	1							
55	1	129150-49100	COCK ASSY, 3-WAY	1							
56	2	129150-49080	COCK, DRAIN	1							
60	1	129210-49280	PIPE ASSY, DRAIN	1							

N:Old ←Yes/No→ New. Q:Old ←No/Yes→ New. R:Old ←Yes/Yes→ New. S:Old ←No/No→ New. W:Add. Z:Discontinued. F:Interchangeable by set. K:Q'ty Change

++ CONTINUE ++

Copyright (C) YANMAR GLOBAL CS CO., LTD. All RightsReserved.

Fig.10. COOLING WATER SYSTEM

(A)=4TNE84-GB2BT
(B)=
(C)=
(D)=
(E)=
(F)=

No.	Lev.	Parts No.	Description	Q'ty (A)	(B)	(C)	(D)	(E)	(F)	I	R
62	2	124766-59050	CLIP, HOSE 12	2							
63	1	23010-038000	CLAMP, 38	2							
64	1	23010-044000	CLAMP, 44	2							

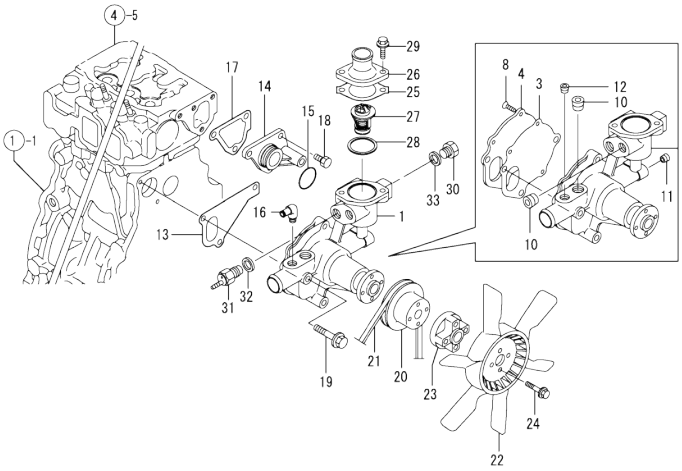

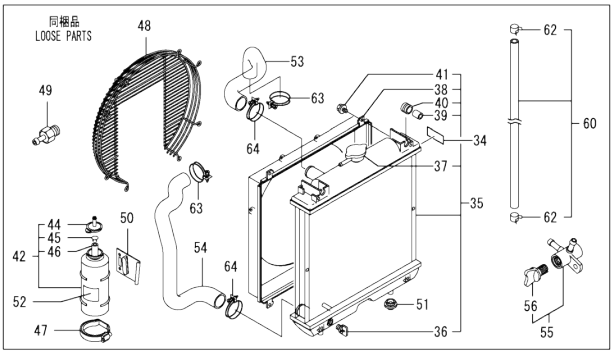

N:Old ←Yes/No→ New. Q:Old ←No/Yes→ New. R:Old ←Yes/Yes→ New. S:Old ←No/No→ New. W:Add. Z:Discontinued. F:Interchangeable by set. K:Q'ty Change

Copyright (C) YANMAR GLOBAL CS CO., LTD. All RightsReserved.

Fig.11. FUEL INJECTION PUMP

(A)=4TNE84-GB2BT
(B)=
(C)=
(D)=
(E)=
(F)=

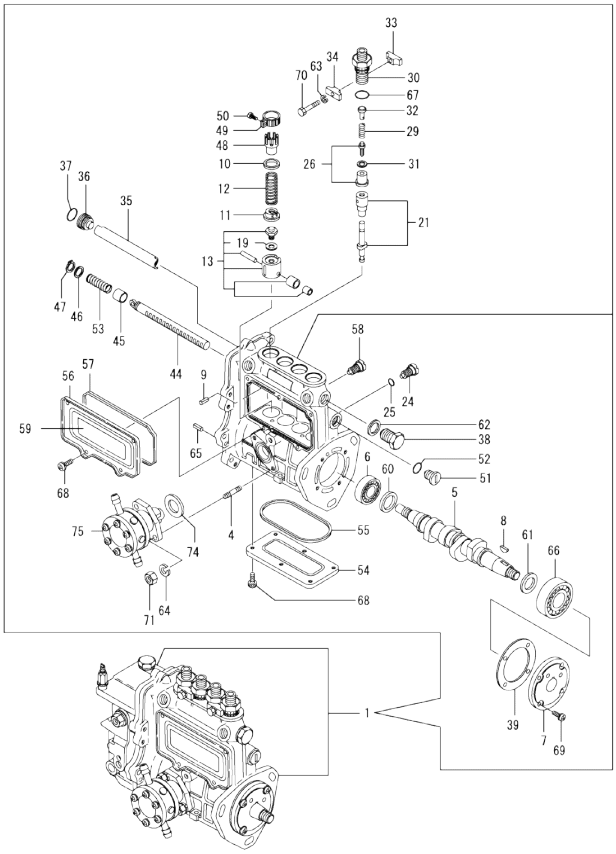

No.	Lev.	Parts No.	Description	Q'ty (A)	(B)	(C)	(D)	(E)	(F)	I	R
1	1	729408-51400	PUMP ASSY, INJECTION	1							1
4	2	129155-51020	STUD	2							
5	2	129470-51040	CAMSHAFT	1							
6	2	129155-51051	BEARING	2							
7	2	129155-51060	SUPPORT, CAMSHAFT	1							
8	2	122710-51090	KEY	1							
9	2	129155-51140	PIN	4							
10	2	158600-51170	RETAINER, SPRING	4							
11	2	129155-51180	RETAINER, SPRING	4							
12	2	124950-51190	SPRING, PLUNGER	4							
13	2	129155-51200	TAPPET ASSY	4							
19	3	129155-51630	SHIM, T=1.2	4							
21	2	129412-51200	PLUNGER ASSY	4							
24	2	129155-51270	STOPPER, TAPPET	4							
25	2	129155-51280	O-RING, S6	4							
26	2	105300-51300	VALVE ASSY, DELIVERY	4							
29	2	129155-51320	SPRING, DELIVERY	4							
30	2	129155-51340	RETAINER	4							
31	2	124550-51350	GASKET, DELIVERY	4							
32	2	129155-51370	STOPPER, VALVE	4							
33	2	129155-51380	STOPPER	2							
34	2	129155-51390	STOPPER	2							
35	2	129555-51400	DEFLECTOR	1							
36	2	158600-51410	PLUG, DEFLECTOR	1							
37	2	119717-51420	O-RING	1							
38	2	158600-51420	PLUG, DEFLECTOR	1							
39	2	129155-51450	SHIM SET, ADJUSTING	1							
44	2	129555-51500	RACK, CONTROL	1							
45	2	129155-51521	BUSH, RACK	1							
46	2	129155-51530	SPACER	1							
47	2	129155-51540	CIRCLIP	1							
48	2	129155-51550	PINION, CONTROL	4							
49	2	129100-51560	PINION	4							
50	2	129100-51570	SCREW	4							
51	2	129155-51570	PLUG, M12	1							
52	2	129155-51580	O-RING	1							
53	2	129155-51591	SPRING, RACK	1							
54	2	129555-51701	COVER	1							
55	2	129555-51711	GASKET	1							
56	2	129555-51751	COVER	1							
57	2	129555-51761	GASKET	1							
58	2	129155-51790	STOOPER, RACK	1							
59	2	129156-51910	LABEL, CAUTION	1							
60	2	129155-51930	SPACER, T=3.25	1							
61	2	129155-51940	SPACER, T=1.5	1							
62	2	22190-160002	WASHER, SEAL 16	1							
63	2	22217-050000	WASHER, SPRING 5	2							
64	2	22217-060000	WASHER, SPRING 6	2							
65	2	22351-050010	PIN, SPRING 5.0X10	2							
66	2	24101-063034	BEARING, BALL 6303	1							
67	2	24316-000150	O-RING, 4DP15.0	4							

Remarks
(1) GOVERNOR ASSY(FIG.12) IS INCORPORATED IN THIS FOP.CMP (REF.NO.1).

N:Old ←Yes/No→ New. Q:Old ←No/Yes→ New. R:Old ←Yes/Yes→ New. S:Old ←No/No→ New. W:Add. Z:Discontinued. F:Interchangeable by set. K:Q'ty Change

++ CONTINUE ++

Copyright (C) YANMAR GLOBAL CS CO., LTD. All RightsReserved.

Fig.11. FUEL INJECTION PUMP

(A)=4TNE84-GB2BT
(B)=
(C)=
(D)=
(E)=
(F)=

No.	Lev.	Parts No.	Description	Q'ty (A)	(B)	(C)	(D)	(E)	(F)	I	R
68	2	26022-050122	SCREW, M5X12	11							
69	2	26022-060162	SCREW, M6X16	4							
70	2	26116-050302	BOLT, M5X 30 PLATED	2							
71	2	26716-060002	NUT, M6	2							
74	2	129155-52051	GASKET	1							
75	2	129100-52101	PUMP ASSY, FUEL FEED	1							

Remarks
(1) GOVERNOR ASSY(FIG.12) IS INCORPORATED IN THIS FOP.CMP (REF.NO.1).

N:Old ←Yes/No→ New. Q:Old ←No/Yes→ New. R:Old ←Yes/Yes→ New. S:Old ←No/No→ New. W:Add. Z:Discontinued. F:Interchangeable by set. K:Q'ty Change

Copyright (C) YANMAR GLOBAL CS CO., LTD. All RightsReserved.

Fig.12. GOVERNOR

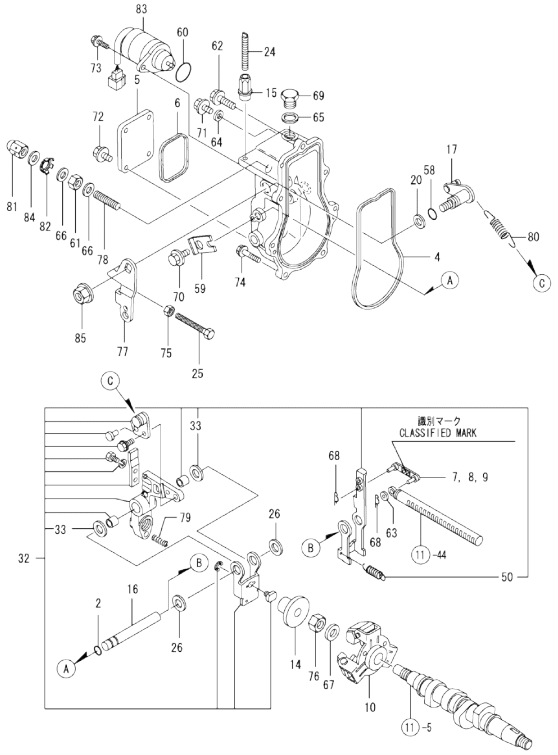

Remarks
(1) SELECTIVE PARTS;CERTAIN THE CLASSIFICATION MARK,THEN PLACE YOUR ORDER.(REF.TO.ILLUSTRATION).
* THIS FIGURE(GOVERNOR ASSY)IS INCORPORATED IN THE FUEL INJECTION PUMP ASSY(FIG.11).

(A)=4TNE84-GB2BT (D)=
(B)= (E)=
(C)= (F)=

No.	Lev.	Parts No.	Description	Q'ty (A)	(B)	(C)	(D)	(E)	(F)	I	R
2	2	129155-51280	O-RING, S6	1							
4	2	129052-61051	GASKET	1							
5	2	129052-61060	COVER, GOVERNOR CASE	1							
6	2	129052-61071	GASKET	1							
7	2	129155-61120	LINK, L=30 MARK 0	1							1
8	2	129155-61130	LINK, L=31 MARK 1	1							1
9	2	129155-61140	LINK, L=30.5 MARK 05	1							1
10	2	129155-61202	WEIGHT ASSY,GOVERNOR	1							
14	2	129155-61360	SLEEVE, L=25.2	1							
15	2	129209-61370	NUT, M6	1							
16	2	129052-61390	SHAFT	1							
17	2	129100-61400	SHAFT ASSY	1							
20	2	129155-61430	SPACER	1							
24	2	129155-61450	BOLT, LIMITER	1							
25	2	129155-61460	BOLT, IDLE	1							
26	2	129155-61480	SPACER ASSY	2							
32	2	129486-61501	LEVER ASSY, GOVERNOR	1							
33	3	174307-51700	SHIM SET	2							
50	3	129486-61540	SPRING, SET	1							
58	2	129155-61830	O-RING, S10	1							
59	2	119660-61901	RETAINER, SHAFT	1							
60	2	158552-61900	O-RING	1							
61	2	129209-61920	NUT, ARB	1							
62	2	129155-61950	BOLT	1							
63	2	22117-040000	WASHER, 4	1							
64	2	22190-060003	SEAL WASER 6	1							
65	2	22190-100002	WASHER, SEAL 10	1							
66	2	22190-120002	WASHER, SEAL 12	2							
67	2	22287-120000	WASHER, 12	1							
68	2	22372-040000	PIN, SNAP 4	2							
69	2	23887-100002	PLUG, 10	1							
70	2	26106-060102	BOLT, M6X 10 PLATED	1							
71	2	26106-060102	BOLT, M6X 10 PLATED	1							
72	2	26106-060102	BOLT, M6X 10 PLATED	4							
73	2	26106-060142	BOLT, M6X 14 PLATED	2							
74	2	26106-060202	BOLT, M6X 20 PLATED	6							
75	2	26756-060002	NUT, LOCK M6	1							
76	2	26776-120002	NUT, LOCK M12	1							
77	2	171488-61440	LEVER, CONTROL	1							
78	2	120323-61470	BOLT, CONTROL	1							
79	2	129500-61650	SPRING, FUEL CONTROL	1							
80	2	129500-61700	SPRING, GOVERNOR	1							
81	2	129209-61930	NUT, CAP	1							
82	2	129209-61970	PLATE	1							
83	2	119653-77950	SOLENOID, STOP	1							
84	2	23414-120016	GASKET, 12X1.0	1							
85	2	26366-080002	NUT, M8	1							

N:Old ←Yes/No→ New. Q:Old ←No/Yes→ New. R:Old ←Yes/Yes→ New. S:Old ←No/No→ New. W:Add. Z:Discontinued. F:Interchangeable by set. K:Q'ty Change

Copyright (C) YANMAR GLOBAL CS CO., LTD. All RightsReserved.

Fig.13. FUEL INJECTION VALVE

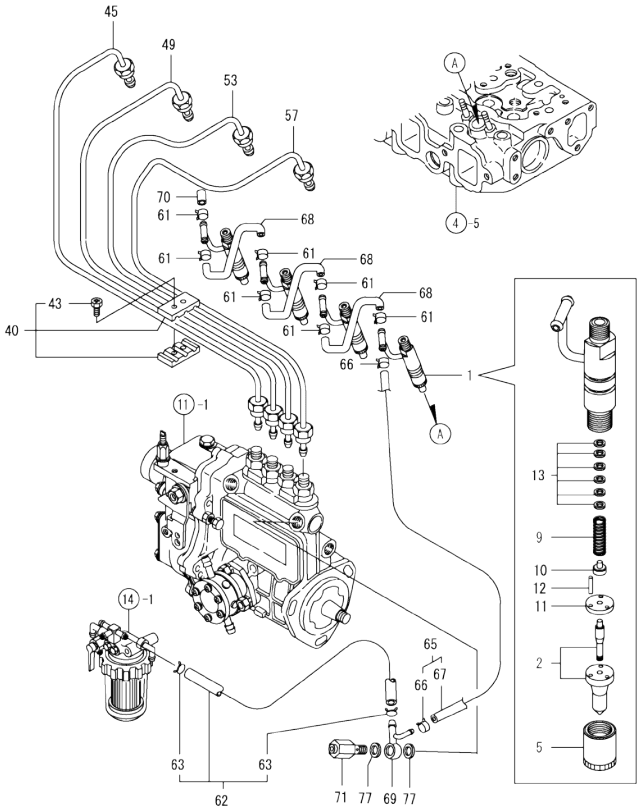

(A)=4TNE84-GB2BT (D)=
(B)= (E)=
(C)= (F)=

No.	Lev.	Parts No.	Description	Q'ty (A)	(B)	(C)	(D)	(E)	(F)	I	R
1	1	729100-53100	VALVE ASSY,INJECTION	4							
2	2	129100-53000	VALVE ASSY,INJECTION	4							
5	2	114250-53080	NUT, NOZZLE D16.95	4							
9	2	114250-53120	SPRING, NOZZLE	4							
10	2	114250-53130	SEAT, SPRING	4							
11	2	114250-53140	PLATE	4							
12	2	114250-53210	PIN	8							
13	2	119803-53400	SHIM SET	4							
40	1	129150-59120	RETAINER, PIPE	2							
43	2	129150-59131	BOLT, M4X14	4							
45	1	129400-59810	PIPE ASSY, INJECTION	1							
49	1	129400-59820	PIPE ASSY, INJECTION	1							
53	1	129400-59830	PIPE ASSY, INJECTION	1							
57	1	129400-59840	PIPE ASSY, INJECTION	1							
61	1	124066-59100	CLIP, HOSE 8	9							
62	1	129210-59150	PIPE ASSY, FUEL	1							
63	2	124766-59050	CLIP, HOSE 12	2							
65	1	119840-59500	PIPE ASSY, RETURN	1							
66	2	124066-59100	CLIP, HOSE 8	2							
67	2	119840-59560	PIPE, FUEL RETURN	1							
68	1	121250-59550	PIPE, FUEL D8X120	3							
69	1	119840-59570	JOINT	1							
70	1	129150-59580	CAP	1							
71	1	119813-59950	VALVE ASSY, CHECK	1							
77	1	22190-120002	WASHER, SEAL 12	2							

N:Old ◄Yes/No► New. Q:Old ◄No/Yes► New, R:Old ◄Yes/Yes► New, S:Old ◄No/No► New, W:Add, Z:Discontinued, F:Interchangeable by set, K:Q'ty Change

Copyright (C) YANMAR GLOBAL CS CO., LTD. All RightsReserved.

Fig.14. FUEL LINE

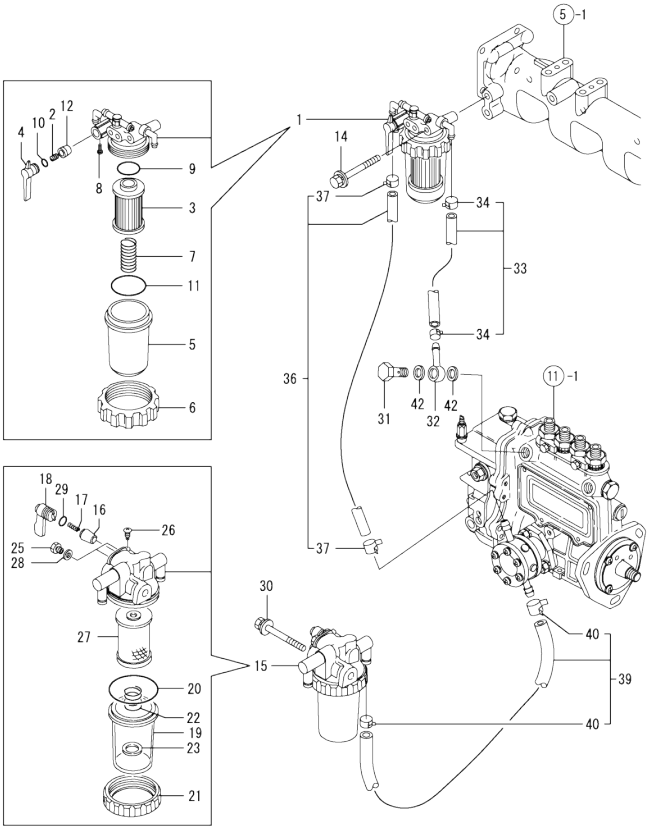

(A)=4TNE84-GB2BT (D)=
(B)= (E)=
(C)= (F)=

No.	Lev.	Parts No.	Description	Q'ty (A)	(B)	(C)	(D)	(E)	(F)	I	R
1	1	129052-55620	FILTER ASSY, FUEL	1							
2	2	104200-55330	SPRING, VALVE	1							
3	2	129100-55650	ELEMENT	1							
4	2	129100-55670	LEVER	1							
5	2	129100-55680	CUP, STRAINER	1							
6	2	129100-55690	RING, RETAINING	1							
7	2	129100-55700	SPRING	1							
8	2	104200-55750	SCREW, M4	1							
9	2	24311-000160	O-RING, 1AP16.0	1							
10	2	24311-240100	O-RING, 1AP10A	1							
11	2	24321-000650	O-RING, 1AG65.0	1							
12	2	104200-55321	VALVE, TAPER	1							
14	1	26014-080702	BOLT, M8X 70	1							
15	1	129335-55700	SEPARATOR ASSY,WATER	1							
16	2	104200-55321	VALVE, TAPER	1							
17	2	104200-55330	SPRING, VALVE	1							
18	2	104200-55341	HANDLE	1							
19	2	124064-55510	COVER	1							
20	2	102103-55520	O-RING	1							
21	2	110250-55610	RING, RETAINING	1							
22	2	121257-55720	SPRING	1							
23	2	121257-55731	FLOAT	1							
25	2	101720-55750	PLUG, 6	2							
26	2	104200-55750	SCREW, M4	1							
27	2	171081-55910	SCREEN	1							
28	2	23418-060000	GASKET, 6X1.0	2							
29	2	24311-240100	O-RING, 1AP10A	1							
30	1	26014-080702	BOLT, M8X 70	1							
31	1	103854-39140	BOLT, PIPE JOINT	1							
32	1	101304-59020	JOINT, PIPE 12	1							
33	1	129210-59040	PIPE ASSY, FUEL	1							
34	2	124766-59050	CLIP, HOSE 12	2							
36	1	129210-59150	PIPE ASSY, FUEL	1							
37	2	124766-59050	CLIP, HOSE 12	2							
39	1	129210-59200	PIPE ASSY, FUEL	1							
40	2	124766-59050	CLIP, HOSE 12	2							
42	1	22190-120002	WASHER, SEAL 12	2							

N:Old ◄Yes/No► New. Q:Old ◄No/Yes► New. R:Old ◄Yes/Yes► New. S:Old ◄No/No► New. W:Add. Z:Discontinued. F:Interchangeable by set. K:Q'ty Change

Copyright (C) YANMAR GLOBAL CS CO., LTD. All RightsReserved.

Fig.15. STARTING MOTOR

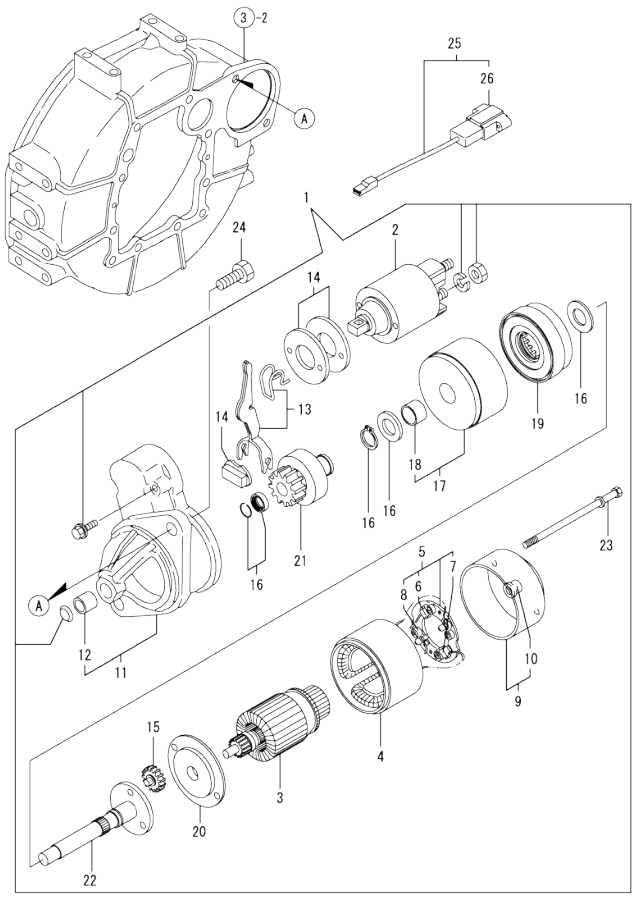

(A)=4TNE84-GB2BT
(B)=
(C)=
(D)=
(E)=
(F)=

No.	Lev.	Parts No.	Description	Q'ty (A)	(B)	(C)	(D)	(E)	(F)	I	R
1	1	129608-77010	STARTER, S114-817A	1							
2	2	129698-77020	SWITCH ASSY	1							
3	2	129698-77101	ARMATURE ASSY	1							
4	2	129608-77110	YOKE ASSY	1							
5	2	129698-77120	HOLDER ASSY, BRUSH	1							
6	3	129698-77140	BRUSH SET	1							
7	3	129698-77130	BRUSH	2							
8	3	129698-77150	SPRING, BRUSH	4							
9	2	129698-77161	COVER ASSY	1							
10	3	129698-77170	BEARING	1							
11	2	129698-77260	CASE ASSY	1							
12	3	X2114535200	METAL, STARTER	1							
13	2	129698-77270	LEVER SET, SHIFT	1							
14	2	129698-77280	COVER KIT	1							
15	2	129698-77240	GEAR	3							
16	2	129698-77250	WASHER SET	1							
17	2	129698-77180	BRACKET	1							
18	3	129698-77190	BRACKET	1							
19	2	129698-77200	GEAR, INTERNAL	1							
20	2	129698-77210	BRACKET	1							
21	2	129698-77220	PINION ASSY	1							
22	2	129698-77230	SHAFT	1							
23	2	124195-77770	BOLT, THROUGH	2							
24	1	26116-120252	BOLT, M12X 25 PLATED	2							
25	1	129052-77951	CONNECTOR, STARTER	1							
26	2	129052-77960	HOUSING	1							

N:Old ←Yes/No→ New. Q:Old ←No/Yes→ New. R:Old ←Yes/Yes→ New. S:Old ←No/No→ New. W:Add. Z:Discontinued. F:Interchangeable by set. K:Q'ty Change

Copyright (C) YANMAR GLOBAL CS CO., LTD. All RightsReserved.

Fig.16. GENERATOR

(A)=4TNE84-GB2BT
(B)=
(C)=
(D)=
(E)=
(F)=

No.	Lev.	Parts No.	Description	Q'ty (A)	(B)	(C)	(D)	(E)	(F)	I	R
1	1	129795-01900	STUD	1							
2	1	171301-77201	DYNAMO ASSY, 15A	1							
3	2	XM08137	PLATE ASSY	1							
5	3	XM08180	STATOR SET	1							
6	3	XM27436	BEARING, BALL	1							
7	3	XM17878	COUPLER	1							
8	3	XM36410	CLAMP	1							
9	3	26022-040252	SCREW, M4X25	2							
10	3	XYSPS4008	SCREW	1							
11	2	XM82184	FLYWHEEL ASSY	1							
17	2	106383-44720	SPACER	1							
18	2	106383-44730	WASHER	1							
19	2	22212-100000	SPRING WASHER 10	1							
20	2	26716-100002	NUT, M10	1							
22	1	26306-100002	NUT, M10	1							
23	1	129410-77330	ADJUSTER	1							
24	1	119810-77340	BOLT, ADJUSTER	1							

N:Old $\frac{\text{Yes}}{\text{No}}$ New. Q:Old $\frac{\text{No}}{\text{Yes}}$ New. R:Old $\frac{\text{Yes}}{\text{Yes}}$ New. S:Old $\frac{\text{No}}{\text{No}}$ New. W:Add. Z:Discontinued. F:Interchangeable by set. K:Q'ty Change

Copyright (C) YANMAR GLOBAL CS CO., LTD. All RightsReserved.

Fig.17. ELECTRICAL PARTS

(A)=4TNE84-GB2BT
(B)=
(C)=
(D)=
(E)=
(F)=

No.	Lev.	Parts No.	Description	Q'ty (A)	(B)	(C)	(D)	(E)	(F)	I	R
1	1	119643-66900	DIODE	1							
2	1	119247-77100	RELAY, SAFETY	2							
3	1	119233-77712	LIMITER, CURRENT 15A	1							
4	1	119643-77900	CONNECTOR, STARTER	1							
5	1	119650-77910	RELAY ASSY, GLOW	1							
8	1	129211-77920	TIMER	1							
9	1	129115-91250	SWITCH ASSY	1							
11	2	129115-91270	KEY ASSY	1							
12	1	170038-91310	LAMP	1							

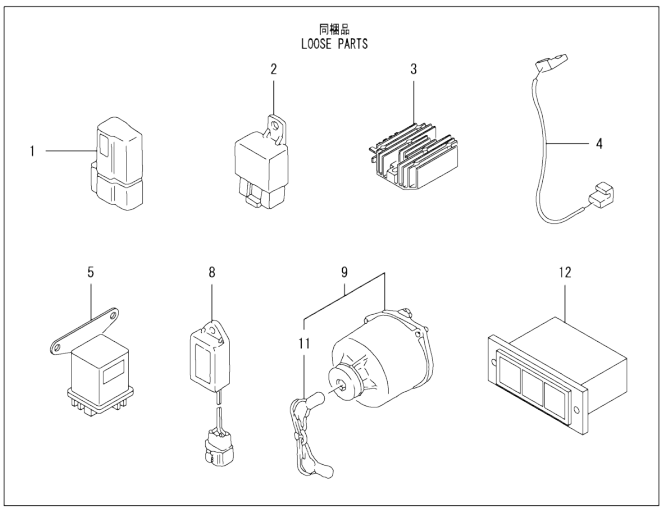

N:Old ◄Yes/No► New. Q:Old ◄No/Yes► New. R:Old ◄Yes/Yes► New. S:Old ◄No/No► New. W:Add. Z:Discontinued. F:Interchangeable by set. K:Q'ty Change

Copyright (C) YANMAR GLOBAL CS CO., LTD. All RightsReserved.

Fig.18. GASKET SET & TOOLS

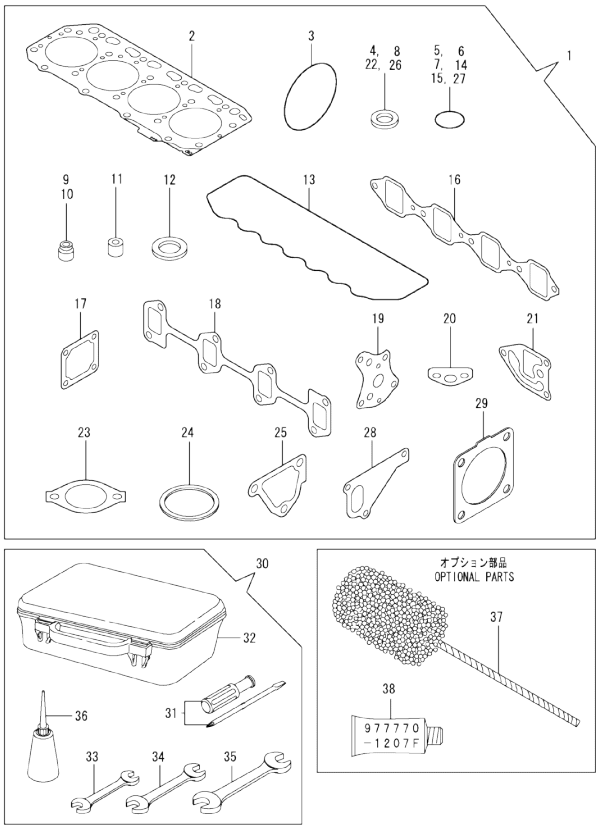

(A)=4TNE84-GB2BT (D)=
(B)= (E)=
(C)= (F)=

No.	Lev.	Parts No.	Description	Q'ty (A)	(B)	(C)	(D)	(E)	(F)	I	R
1	1	729150-92950	GASKET SET	1							1
2	2	129408-01330	GASKET, HEAD	1							
3	2	121850-51960	O-RING	1							
4	2	22190-080002	WASHER, SEAL 6	7							
5	2	119609-32040	O-RING, P16	2							
6	2	24311-000320	O-RING, 1AP32.0	2							
7	2	24341-000240	O-RING, 1AS24.0	1							
8	2	22190-220002	WASHER, SEAL 22	1							
9	2	121400-11340	SEAL, VALVE STEM	4							
10	2	124460-11340	SEAL, VALVE STEM	4							
11	2	119625-11870	PROTECTOR, NOZZLE	4							
12	2	119625-11880	SEAT, NOZZLE	4							
13	2	129550-11310	GASKET, BONNET	1							
14	2	24341-000500	O-RING, 1AS50.0	1							
15	2	24311-000120	O-RING, 1AP12.0	3							
16	2	129550-12112	GASKET, MANIFOLD	1							
17	2	129150-77511	GASKET	1							
18	2	129550-13110	GASKET	1							
19	2	129150-32020	GASKET, PUMP	1							
20	2	129150-35042	GASKET	1							
21	2	129103-35122	GASKET	1							
22	2	22190-100002	WASHER, SEAL 10	2							
23	2	129795-49551	GASKET	1							
24	2	129150-49811	GASKET, THERMOSTAT	1							
25	2	124395-49840	GASKET	1							
26	2	124465-44950	GASKET, 16	2							
27	2	129486-42140	O-RING, G30	1							
28	2	129486-42021	GASKET, WATER PUMP	1							
29	2	129930-13201	GASKET, SILENCER	1							
30	1	721400-92102	BOX ASSY, TOOL	1							
31	2	104200-92350	DRIVER, SCREW	1							
32	2	104200-92600	BOX, TOOL	1							
33	2	28110-100120	SPANNER, 10X12	1							
34	2	28110-140170	SPANNER, 14X17	1							
35	2	28110-190220	SPANNER, 19X22	1							
36	2	28210-000140	OILER	1							
37	1	129400-92420	HONE	1							1
38	1	977770-1207F	GASKET.LIQUID	1							1

Remarks
(1) OPTIONAL PARTS.

N:Old ←Yes/No→ New. Q:Old ←No/Yes→ New. R:Old ←Yes/Yes→ New. S:Old ←No/No→ New. W:Add. Z:Discontinued. F:Interchangeable by set. K:Q'ty Change

Copyright (C) YANMAR GLOBAL CS CO., LTD. All RightsReserved.

Parts No. Index

Parts No.	Fig. No.	Ref. No.
101304-59020	14	32
101720-55750	14	25
102103-55520	14	20
103854-39140	14	31
104200-55321	14	12
		16
104200-55330	14	2
		17
104200-55341	14	18
104200-55750	14	8
		26
104200-92350	18	31
104200-92600	18	32
105300-51300	11	26
106383-44720	16	17
106383-44730	16	18
110250-55610	14	21
114250-39450	9	49
114250-53080	13	5
114250-53120	13	9
114250-53130	13	10
114250-53140	13	11
114250-53210	13	12
118400-44670	10	39
118400-44720	10	40
119131-18320	6	5
119156-44600	10	49
119226-07900	4	2
119233-77712	17	3
119247-77100	17	2
119255-44660	10	51
119609-32040	2	10
	18	5
119620-01750	3	3
119625-11870	4	43
	18	11
119625-11880	4	44
	18	12
119625-11900	4	45
119640-01640	3	8
119643-66900	17	1
119643-77900	17	4
119650-77910	17	5
119653-77950	12	83
119660-61901	12	59
119717-51420	11	37
119802-11280	4	33
119803-53400	13	13
119810-77340	16	24
119813-59950	13	71

Parts No.	Fig. No.	Ref. No.
119840-59500	13	65
119840-59560	13	67
119840-59570	13	69
119865-21600	8	14
120130-11860	4	28
120323-61470	12	78
121023-01551	2	23
121111-21501	8	11
121250-44901	10	31
121250-59550	13	68
121256-44600	10	50
121257-55720	14	22
121257-55731	14	23
121400-11340	4	21
	18	9
121400-12540	5	15
121400-12560	5	16
121400-12570	5	17
121420-12511	5	6
121420-12540	5	9
121420-12550	5	10
121420-12561	5	11
121422-12530	5	8
121422-12570	5	12
121422-12580	5	13
121450-01560	2	5
121450-42450	10	30
121520-34810	9	18
121521-12500	5	5
121550-23200	8	26
121550-49111	9	16
121850-21680	8	10
121850-42410	10	8
121850-51960	2	11
	18	3
122710-51090	11	8
123900-13610	6	3
123900-13630	6	4
124064-55510	14	19
124066-59100	13	61
		66
124160-01751	2	6
	4	49
124160-01910	1	5
		6
124160-11360	4	58
124160-39140	9	42
124195-77770	15	23
124240-01871	2	7
124395-49840	10	17

Parts No.	Fig. No.	Ref. No.
124395-49840	18	25
124450-44510	10	42
124450-44530	10	44
124450-44550	10	47
124450-44560	10	45
124460-11340	4	22
	18	10
124465-44950	10	32
		33
	18	26
124550-51350	11	31
124550-59820	9	45
124550-59830	9	44
124764-44810	10	52
124766-59050	10	62
	13	63
	14	34
		37
		40
124950-51190	11	12
126650-12680	5	14
129001-01250	1	4
129001-02931	1	30
129001-42004	10	1
129001-42040	10	14
129002-22090	8	15
129002-22510	8	17
129002-22910	8	30
129002-22960	8	32
129006-44480	9	33
129033-01770	9	26
129033-35100	9	25
129033-49030	9	34
129052-55620	14	1
129052-61051	12	4
129052-61060	12	5
129052-61071	12	6
129052-61390	12	16
129052-77951	15	25
129052-77960	15	26
129067-33011	9	22
129100-01580	3	1
		15
	8	2
129100-01640	3	16
129100-11100	4	17
129100-11130	4	19
129100-23910	8	29
129100-25061	7	9
129100-25900	7	15

Parts No.	Fig. No.	Ref. No.
129100-42051	10	3
129100-42121	10	4
129100-51560	11	49
129100-51570	11	50
129100-52101	11	75
129100-53000	13	2
129100-55650	14	3
129100-55670	14	4
129100-55680	14	5
129100-55690	14	6
129100-55700	14	7
129100-61400	12	17
129103-35122	9	30
	18	21
129103-49301	10	16
129107-44590	10	37
129115-91250	17	9
129115-91270	17	11
129120-77502	5	25
129150-01200	1	28
129150-02020	1	8
129150-02450	7	4
129150-02871	1	33
129150-02931	1	24
129150-02941	1	36
129150-03020	4	50
129150-03070	4	51
129150-03080	4	52
129150-03100	2	9
129150-11230	4	39
129150-11280	4	34
129150-11370	4	23
129150-11750	4	41
129150-11810	4	29
129150-14101	7	6
129150-14200	7	1
129150-14400	7	2
129150-21200	8	4
129150-23601	8	27
129150-23611	8	36
129150-25101	7	10
129150-25920	7	13
129150-32020	9	14
	18	19
129150-35042	9	19
	18	20
129150-35153	9	32
129150-49080	10	56
129150-49100	10	55
129150-49811	10	28

Parts No. Index

Parts No.	Fig. No.	Ref. No.
129150-49811	18	24
129150-59120	13	40
129150-59131	13	43
129150-59580	13	70
129150-77511	5	26
	18	17
129155-11260	4	31
129155-11270	4	32
129155-49801	10	27
129155-51020	11	4
129155-51051	11	6
129155-51060	11	7
129155-51140	11	9
129155-51180	11	11
129155-51200	11	13
129155-51270	11	24
129155-51280	11	25
	12	2
129155-51320	11	29
129155-51340	11	30
129155-51370	11	32
129155-51380	11	33
129155-51390	11	34
129155-51450	11	39
129155-51521	11	45
129155-51530	11	46
129155-51540	11	47
129155-51550	11	48
129155-51570	11	51
129155-51580	11	52
129155-51591	11	53
129155-51630	11	19
129155-51790	11	58
129155-51930	11	60
129155-51940	11	61
129155-52051	11	74
129155-61120	12	7
129155-61130	12	8
129155-61140	12	9
129155-61202	12	10
129155-61360	12	14
129155-61430	12	20
129155-61450	12	24
129155-61460	12	25
129155-61480	12	26
129155-61830	12	58
129155-61950	12	62
129156-51910	11	59
129165-49060	9	39
129202-22300	8	21

Parts No.	Fig. No.	Ref. No.
129209-61370	12	15
129209-61920	12	61
129209-61930	12	81
129209-61970	12	82
129210-49280	10	60
129210-59040	14	33
129210-59150	13	62
	14	36
129210-59200	14	39
129211-77920	17	8
129335-55700	14	15
129350-49560	10	26
129400-01520	2	4
129400-01730	3	6
129400-01770	3	7
129400-11350	4	48
129400-59810	13	45
129400-59820	13	49
129400-59830	13	53
129400-59840	13	57
129400-92420	18	37
129403-34800	9	17
129403-42380	10	20
129403-44740	10	22
129407-21100	8	1
129407-32000	9	1
129408-01330	1	29
	18	2
129410-77330	16	23
129411-13100	6	1
129412-51200	11	21
129417-33110	9	24
129417-35150	9	29
129436-35070	9	20 -1
129436-35091	9	20
129467-49040	9	37
129470-11080	4	9
129470-11090	4	10
129470-51040	11	5
129486-01670	3	19
129486-42021	10	13
	18	28
129486-42140	10	15
	18	27
129486-61501	12	32
129486-61540	12	50
129488-12100	5	1
129500-61650	12	79
129500-61700	12	80
129508-33050	9	23

Parts No.	Fig. No.	Ref. No.
129508-44501	10	35
129508-44550	10	36
129550-11290	4	35
129550-11310	4	54
	18	13
129550-12112	5	2
	18	16
129550-13110	6	2
	18	18
129550-39450	9	43
129555-11241	4	30
129555-51400	11	35
129555-51500	11	44
129555-51701	11	54
129555-51711	11	55
129555-51751	11	56
129555-51761	11	57
129601-44560	10	48
129601-44600	10	38
129608-77010	15	1
129608-77110	15	4
129612-01600	3	2
129612-42350	10	21
129612-49030	10	53
129612-49040	10	54
129688-01780	3	7 -1
129698-77020	15	2
129698-77101	15	3
129698-77120	15	5
129698-77130	15	7
129698-77140	15	6
129698-77150	15	8
129698-77161	15	9
129698-77170	15	10
129698-77180	15	17
129698-77190	15	18
129698-77200	15	19
129698-77210	15	20
129698-77220	15	21
129698-77230	15	22
129698-77240	15	15
129698-77250	15	16
129698-77260	15	11
129698-77270	15	13
129698-77280	15	14
129795-01780	3	18
129795-01800	2	3
129795-01900	16	1
129795-01950	2	8
129795-02412	1	11

Parts No.	Fig. No.	Ref. No.
129795-11120	4	18
129795-11180	4	20
129795-21661	8	9
129795-49551	10	25
	18	23
129900-07900	4	3
129916-49740	10	10
129930-13201	6	7
	18	29
158552-61900	12	60
158600-51170	11	10
158600-51410	11	36
158600-51420	11	38
170038-91310	17	12
171008-03990	9	35
171051-01921	1	7
171061-12520	5	7
171064-12600	5	21
171081-55910	14	27
171301-21650	8	8
171301-77201	16	2
171350-03090	4	1
171351-12210	5	4
171351-12560	5	19
171351-12570	5	20
171351-12580	5	18
171353-44760	10	23
171420-21580	8	12
171488-61440	12	77
172437-03391	10	34
174307-51700	12	33
22117-040000	12	63
22190-060003	12	64
22190-080002	2	12
		13
	9	46
		47
	18	4
22190-100002	9	48
	12	65
	18	22
22190-120002	12	66
	13	77
	14	42
22190-160002	11	62
22190-220002	3	10
	18	8
22212-100000	16	19
22217-050000	11	63
22217-060000	11	64

Parts No. Index

Parts No.	Fig. No.	Ref. No.
22217-120000	7	16
22252-000260	8	22
22287-120000	12	67
22351-040010	8	7
22351-050010	11	65
22351-060012	4	24
22372-040000	12	68
22512-070140	7	7
	8	5
23000-060000	5	22
23010-038000	10	63
23010-044000	10	64
23061-070230	10	46
23080-018000	9	40
23414-120016	12	84
23418-060000	14	28
23871-020000	4	13
23871-030000	4	14
23876-010000	1	12
	10	11
23876-020000	10	12
23876-030000	1	27
23887-100002	12	69
24101-063034	11	66
24311-000120	4	59
	18	15
24311-000160	14	9
24311-000320	2	14
	4	55
	18	6
24311-240100	14	10
		29
24316-000150	11	67
24321-000650	14	11
24341-000240	2	24
	18	7
24341-000500	4	56
	18	14
26014-060122	10	41
26014-080702	14	14
		30
26022-040252	16	9
26022-050122	11	68
26022-060162	11	69
26106-060102	12	70
		71
		72
26106-060142	12	73
26106-060162	2	25
26106-060202	12	74

Parts No.	Fig. No.	Ref. No.
26106-060352	10	24
26106-080122	2	15
26106-080142	4	4
	5	23
	7	8
26106-080162	2	16
		17
	3	11
	4	57
	10	18
26106-080202	2	18
	10	29
26106-080252	3	12
	4	46
	9	41
26106-080352	3	20
	5	3
		27
	9	21
26106-080452	2	19
	3	13
	7	14
26106-080502	3	14
	4	47
26106-080552	2	20
	9	21 -1
26106-080602	10	19
26106-080852	2	21
26116-050302	11	70
26116-120252	15	24
26206-100252	3	4
26206-100302	3	5
26216-060202	4	25
26306-080002	2	22
	6	6
26306-100002	16	22
26366-060002	4	26
	5	24
26366-080002	12	85
26450-060252	9	15
26716-060002	11	71
26716-100002	16	20
26716-120002	7	17
26756-060002	12	75
26756-080002	4	42
26776-120002	12	76
27241-120000	1	13
27241-220000	4	15
27241-300000	1	14
27241-400000	4	16

Parts No.	Fig. No.	Ref. No.
27310-080001	4	27
28110-100120	18	33
28110-140170	18	34
28110-190220	18	35
28210-000140	18	36
719810-01500	2	1
721400-92102	18	30
729100-53100	13	1
729150-92950	18	1
729402-11650	4	38
729402-14580	7	3
729402-23100	8	23
729408-01561	1	1
729408-11700	4	5
729408-51400	11	1
977770-1207F	18	38
X2114535200	15	12
XM08137	16	3
XM08180	16	5
XM17878	16	7
XM27436	16	6
XM36410	16	8
XM82184	16	11
XYSPS4008	16	10

Parts No.	Fig. No.	Ref. No.